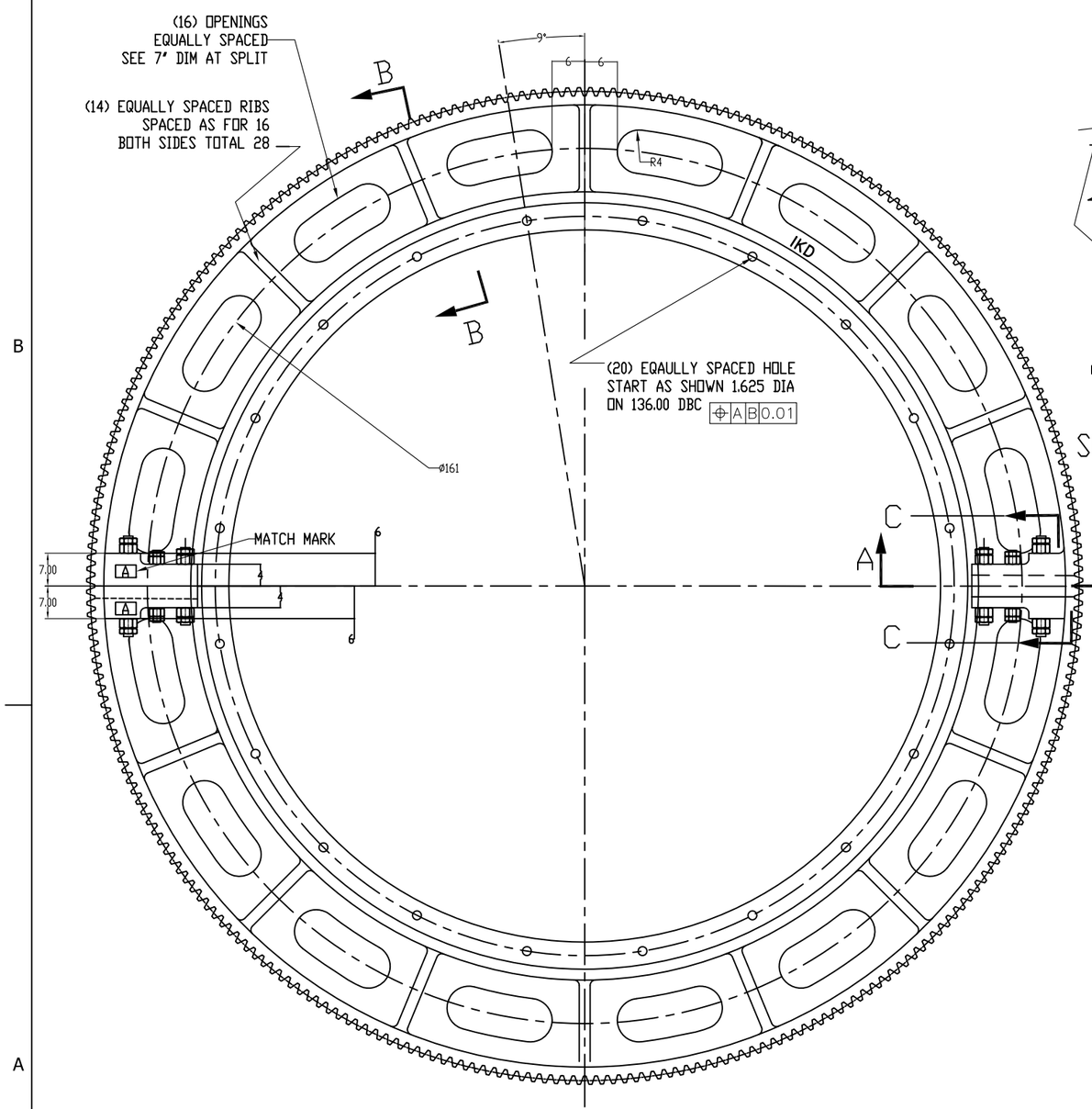

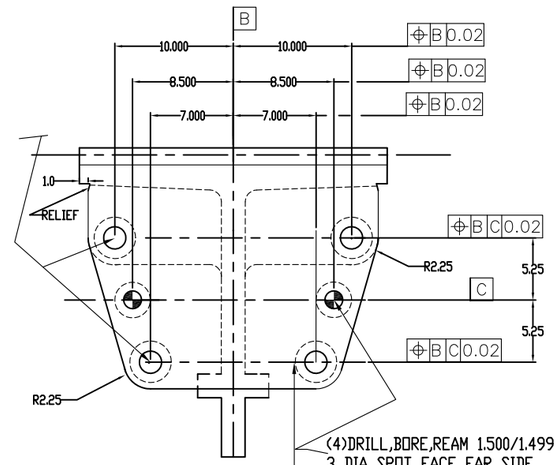

SECTION "A"-"A"

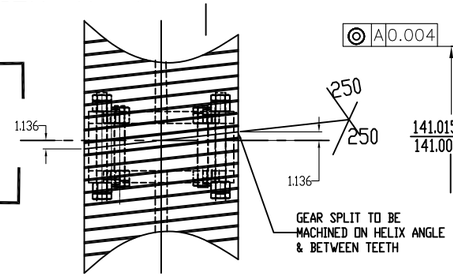

VIEW "D"-"D"

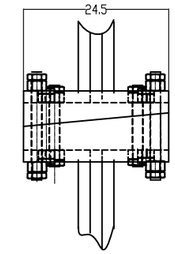

SECTION "C"-"C"

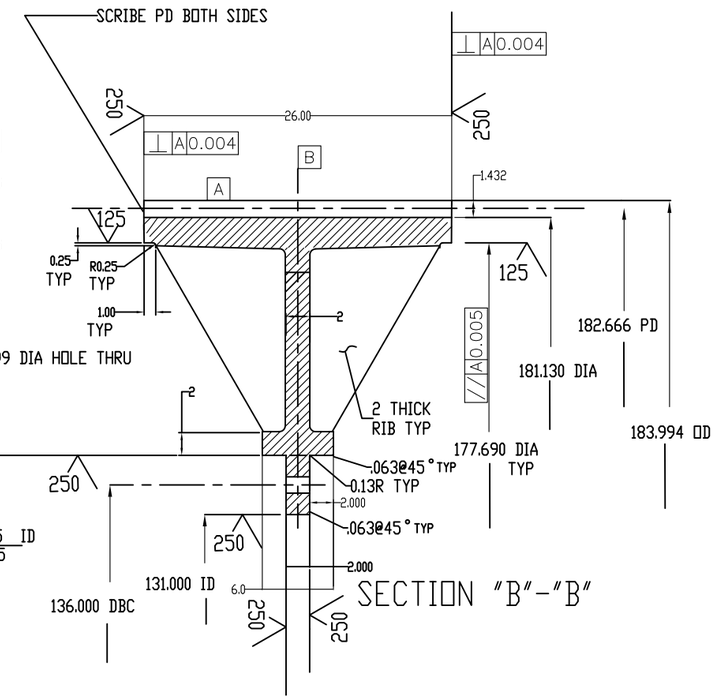

SECTION "B"-"B"

CAST STEEL AGMA 6033-A87-A, 180-220 BHN, ASTM A148(MOD) OR EQUAL AGMA QUALITY 8 IN ACCORDANCE WITH AGMA 2000-A88			
TOOTH FORM -SINGLE HELICAL, 20° INVOLUTE FULL DEPTH			
LINEAR DP	1.5	WHOLE DEPTH	1.432
ADDENDUM	0.664	NO. OF TEETH	274
PITCH DIA.	182.666	HAND	RIGHT
OUTSIDE DIA.	183.994	HELIX ANGLE	5.0147°
PRESSURE ANGLE	20°	UNIT WEIGHT EST.	26000#

REV. NO	DATE	BY	APPV.	DESCRIPTION

TOLERANCES UNLESS OTHERWISE NOTED

WHOLE NUMBER DIM.	±1/16"	ANGULAR DIM.	±1/2~
FRACTIONAL DIM.	±1/16"	DECIMAL DIM. (.XX)	±.010
		(.XXX)	±.005

NOTICE: THE INFORMATION CONTAINED HEREIN IS PROPRIETARY TO LOUISVILLE DRYING MACHINERY AND SHALL NOT BE REPRODUCED OR DISCLOSED IN WHOLE OR IN PART, NOR USED FOR ANY DESIGN OR MANUFACTURING PURPOSE UNLESS AUTHORIZED IN WRITING BY LOUISVILLE DRYING MACHINERY

NEXT DWG'S: DV-2688-1

A BRAND NAME OF IKD
VULCAN IRON WORKS™

CUSTOMER: CALIDRA

DESCRIPTION: BALL MILL GIRTH GEAR
DRY GRATE DISCHARGE

IKD
12711 TOWNEPARK WAY
LOUISVILLE, KY 40219-1804 USA
TELEPHONE (502) 969-3535
FAX (502) 969-9028

DWG. BY: NEG	DATE: 01-22-1999
CHK. BY: -	
APPROVED BY: -	
SCALE:	DWG.# BV-26767
	SHT. # OF: